A Novel T-Connected Autotransformer-Based 18-Pulse AC–DC Converter for Harmonic Mitigation in Adjustable-Speed Induction-Motor Drives

Bhim Singh, *Senior Member, IEEE*, Vipin Garg, *Member, IEEE*, and G. Bhuvaneswari, *Senior Member, IEEE*

***Abstract*—This paper presents the design, analysis, and development of a novel autotransformer-based 18-pulse ac–dc converter with reduced kilovoltampere rating, feeding vector-controlled induction-motor drives (VCIMDs) for power-quality improvement at the point of common coupling (PCC). The proposed autotransformer consists of only two single-phase transformers for its realization against three single-phase transformers required in other configurations. The proposed 18-pulse ac–dc converter is suitable for retrofit applications, where, presently, a six-pulse diode bridge rectifier is being used. A set of power-quality parameters, such as total harmonic distortion (THD) and crest factor of ac mains current, power factor, displacement factor, and distortion factor at ac mains, THD of supply voltage at PCC, and dc-bus-voltage ripple factor for a VCIMD fed from an 18-pulse ac–dc converter, are computed to observe its performance. The presented design technique provides flexibility to give an average dc output from the proposed converter, which is the same as that of a conventional three-phase diode bridge rectifier. However, it is also possible to step-up or step-down the output voltage as required. The effect of load variation on VCIMD is also studied to observe the effectiveness of the proposed harmonic mitigator. A laboratory prototype of the proposed autotransformer-based 18-pulse ac–dc converter is developed to validate the design and simulation model.**

***Index Terms*—Autotransformer, multipulse ac–dc converter, power quality improvement, T-connection, vector-controlled induction-motor drive (VCIMD).**

I. Introduction

WITH the revolution in semiconductor, self-commutating devices, and reduction in their cost, induction-motor drives are expanding in industrial, commercial, residential, aerospace, and utility environments. The induction-motor drives are being used universally in applications such as heating, ventilation, and air conditioning systems, pumps, blowers, fans, paper and textile mills, rolling mills, etc. [1], [2]. The induction-motor drives are currently used in vector-control mode [3] due to its capability of providing simple and fast control similar to a dc motor. These drives are fed from a diode bridge rectifier, which results in injection of current harmonics, resulting in equipment overheating, low rectifier efficiency, malfunction of sensitive electronic equipment, etc. [4]–[6]. These harmonic currents result in voltage distortion (as they travel through finite source impedance) at point of common coupling (PCC), thereby affecting the nearby consumers. To control these harmonics, an IEEE Standard 519 [7] has been reissued in 1992.

Many power-factor (PF) correction approaches have been proposed to shape ac input current waveforms in phase with input voltage. Different techniques based on multipulse converters have been reported in the literature [8]–[24]. The conventional wye–delta-transformer-based 12-pulse rectification scheme is one such example. But, it is very difficult to build wye- and delta-connected windings with comparable electrical characteristics (the same voltage and impedance). Moreover, the kilovoltampere rating of the transformer is 1.03 P_o, where P_o is the active power drawn by the converter [10]. To reduce the transformer rating, autotransformer-based multipulse converters have been reported in the literature [8]. In the autotransformer, the windings are interconnected, such that, the kilovoltampere rating of the magnetic coupling is only a fraction of the total kilovoltampere of the vector-controlled induction-motor drive (VCIMD), resulting in the reduction in size and weight of the transformer. For applications where the demand for harmonic current reduction is more stringent, an 18-pulse ac–dc converter is generally preferred. This converter is more economical than the 24-pulse ac–dc converter, while being more effective than the 12-pulse ac–dc converter. Autotransformer-based 18-pulse ac–dc converters have been reported in the literature [17] for reducing the total harmonic distortion (THD) of the ac mains current. Here, the dc-link voltage is higher, making the scheme nonapplicable for retrofit applications. To overcome the problem of higher dc-link voltage, Hammond [18] has proposed a new topology, but the transformer design is very complex. To simplify the transformer design, Paice [19] has reported a topology for the 18-pulse converter. But, the THD of ac mains current with this topology is around 8% at full load. Kamath *et al.* [20] have also reported the 18-pulse converter, but the THD of the ac mains current in the 18-pulse converter is high even at full load (6.9%), and as load decreases, the THD of ac mains current increases further (13.1% THD at 50% load). Recently, an 18-pulse ac–dc converter has also been presented [24] with a rating of 0.56 P_o. However, the THD of supply current with this topology has been reported as 10.12%, which is not within IEEE Standard 519-1992 limits [7].

Manuscript received March 23, 2006; revised August 22, 2006.

B. Singh and G. Bhuvaneswari are with the Department of Electrical Engineering, Indian Institute of Technology Delhi, New Delhi 110016, India.

V. Garg is with Reliance Energy Limited, Mumbai 400 055, India (e-mail: vipin123123@gmail.com).

Color versions of one or more of the figures in this paper are available online at http://ieeexplore.ieee.org.

Digital Object Identifier 10.1109/TIE.2007.900332

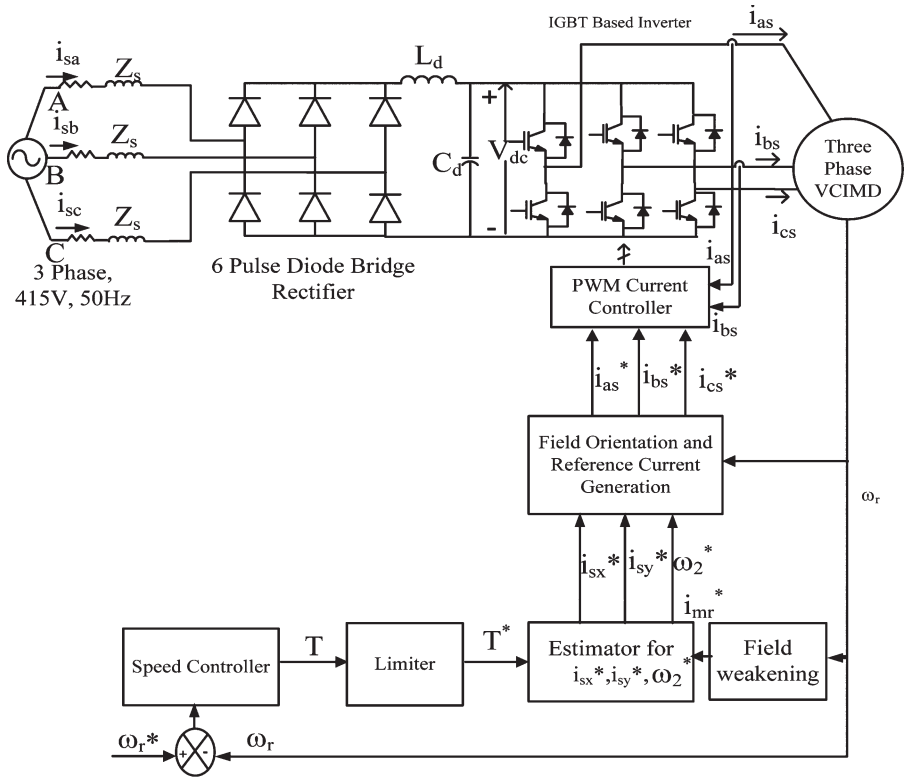

Fig. 1. Six-pulse diode bridge rectifier fed VCIMD (Topology A).

In this paper, a novel T-connected autotransformer-based 18-pulse ac–dc converter [25], [26] of reduced rating, which is suitable for retrofit applications (where, presently, six-pulse converter is being used, as shown in Fig. 1 and referred to as Topology "A" here) is proposed to feed the VCIMD. The proposed ac–dc converter results in the elimination of the 5th, 7th, 11th, and 13th harmonics. It results in near-unity PF operation in the wide operating range of the drive. The present approach results in the following advantages.

1) Compact, simple, cost-effective, rugged, and reliable converter configuration, as only two single-phase transformers are needed to realize the proposed converters.
2) A retrofit solution, which improves utilization of the diode bridge rectifier already existing in the VCIMD.
3) The kilovoltampere rating of the magnetics is reduced, resulting in a cost-effective solution.
4) Even under light-load conditions, the THD of the ac mains current and the PF are improved.

A set of tabulated results, which gives the comparison of the different power-quality parameters such as THD and crest factor of ac mains current, PF, ripple factor, displacement factor and distortion factor, and THD of the supply voltage at PCC, is presented for a VCIMD fed from an existing six-pulse ac–dc converter and the 12-pulse and the proposed 18-pulse ac–dc converters. A small-rating laboratory prototype of the proposed autotransformer-based 18-pulse converter is designed and developed, and different tests are carried out to validate the working of the proposed harmonic mitigator. The test results are found in close agreement with the simulated results under different operating conditions.

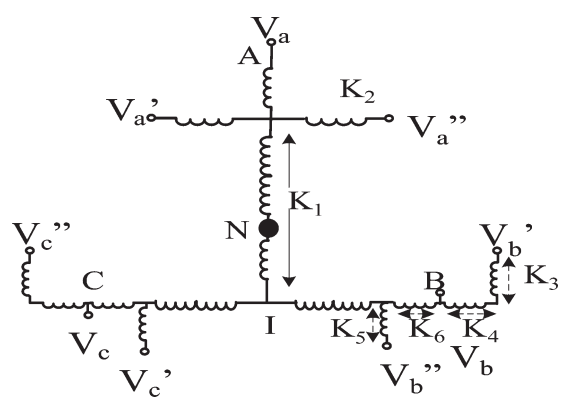

Fig. 2. Proposed autotransformer winding-connection diagram.

II. Design of T-Connected Autotransformer for 18-Pulse AC–DC Converter

The minimum phase shift required for proper harmonic elimination is given by [8]

$$\text{Phase shift} = 60^\circ/\text{Number of converters}.$$

In this paper, the first T-connected autotransformer-based 12-pulse ac–dc converter is designed. However, the design procedure is explained here for the 18-pulse ac–dc converter.

An 18-pulse ac–dc conversion may be achieved by having three sets of balanced three-phase line voltages, which are either $\pm 20^\circ$ or $\pm 40^\circ$ out of phase with respect to each other, and the magnitude of these line voltages should be equal to each other.

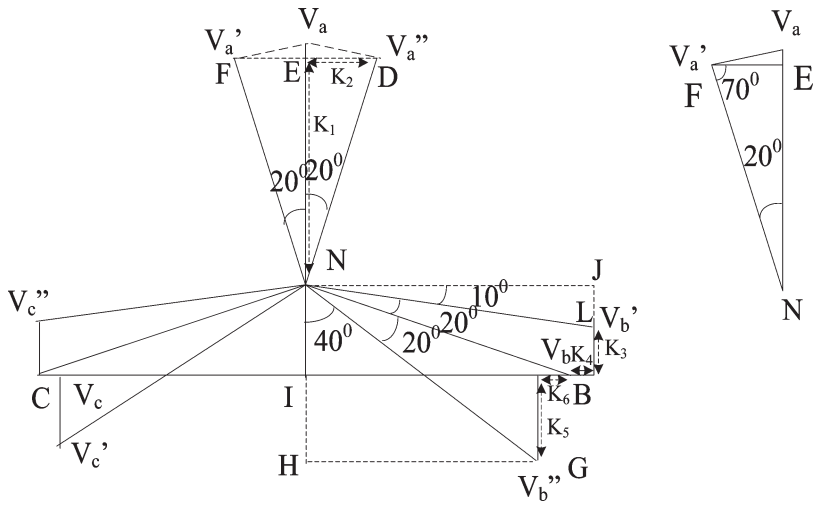

Fig. 3. Vector diagram of phasor voltages for proposed 18-pulse-based ac–dc converter along with auxiliary triangle.

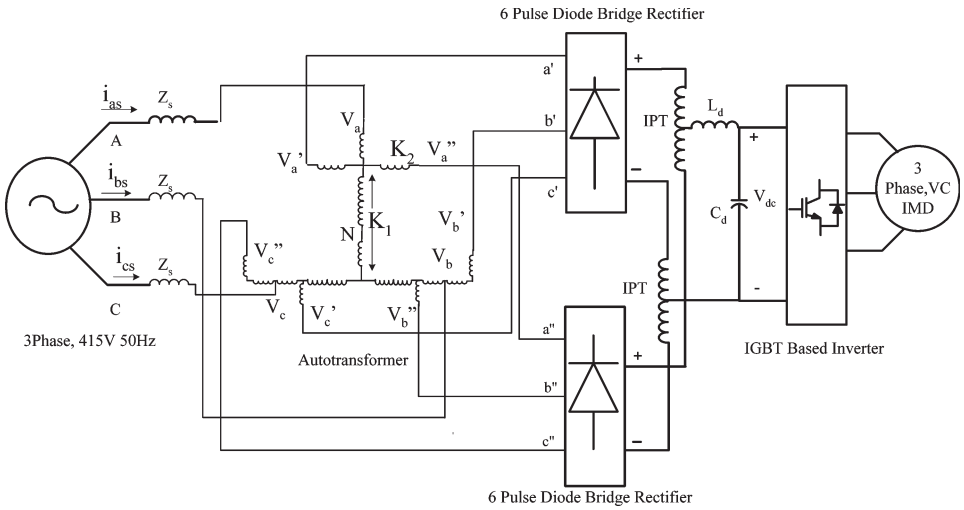

Fig. 4. T-connected autotransformer-based 12-pulse converter (with phase shift of $+15°$ and $-15°$) fed VCIMD (Topology B).

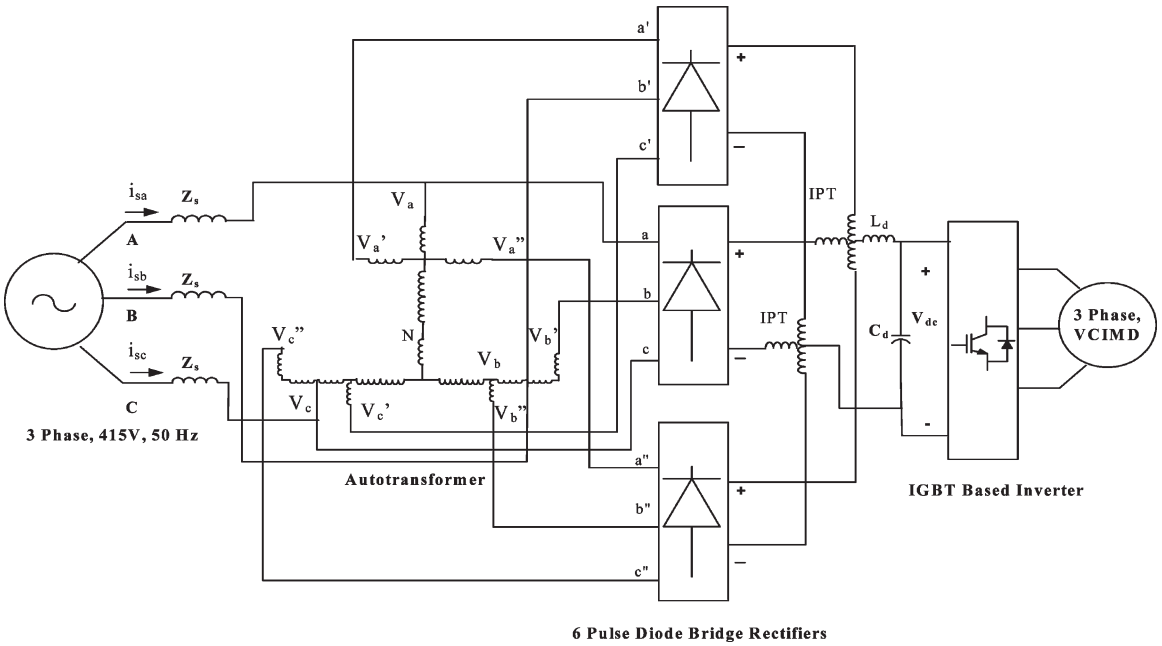

Fig. 5. T-connected autotransformer-based proposed 18-pulse converter (with phase shift of $+20°$ and $-20°$) fed VCIMD (Topology C).

The T-connected autotransformer makes use of only two single-phase transformers, resulting in savings in space, volume, weight, and, finally, the cost of the drive. The windings AI and CB are connected, as shown in Fig. 2, and N is the neutral point. The ratio of the number of turns in windings AI (N_1) and CB (N_2) are given by [27]

$$N_1/N_2 = 0.866. \tag{1}$$

Fig. 2 shows the winding diagram of the proposed autotransformer for achieving 18-pulse rectification, and Fig. 3 shows the phasor diagram of different phase voltages. In Fig. 3, considering phase "A," the voltages V_a' (between F and N) and V_a'' (between D and N) are phase shifted through $\pm 20°$ with respect to the supply voltage V_a. To produce V_a' and V_a'', two constants K_1 and K_2 are calculated as follows:

$$\begin{aligned} V_{\mathrm{NE}}/V_{\mathrm{ND}} &= \cos 20° \\ V_{\mathrm{NE}} &= K_1 * V_a \\ &= V_{\mathrm{ND}} \cos 20° \\ &= V_a \cos 20° \end{aligned}$$

giving

$$\begin{aligned} \mathrm{K}_1 &= \cos 20° \\ &= 0.9396. \end{aligned} \tag{2}$$

Similarly

$$\begin{aligned} V_{\mathrm{ED}}/V_{\mathrm{NE}} &= \sin 20° \\ V_{\mathrm{ED}} &= K_2 * V_{bc} \\ &= V_a \sin 20° \end{aligned}$$

giving

$$\begin{aligned} K_2 &= \sin 20°/1.732 \\ &= 0.1974. \end{aligned} \tag{3}$$

Thus, V_a' is obtained by connecting a fraction K_1 of phase "A" voltage V_a to a fraction K_2 of line voltage V_{bc}. Similarly, V_a'' can also be obtained.

For phase B, two voltages V_b' and V_b'' are to be produced at an angle of $\pm 20°$ with respect to the supply voltage V_b. Consider triangle NLJ

$$\mathrm{LJ} = V_b \sin 10°$$

giving

$$\begin{aligned} K_3 &= (\mathrm{NL} - V_b \sin 10°)/V_a \\ &= (V_b/2 - V_b \sin 10°)/V_a \end{aligned}$$

giving

$$K_3 = 0.326 \tag{4}$$

$$\begin{aligned} \mathrm{NJ} &= V_a \cos 10° \\ K_4 V_{bc}/2 &= (V_b \cos 10° - V_{bc}/2) \end{aligned}$$

giving

$$K_4 = 0.13715. \tag{5}$$

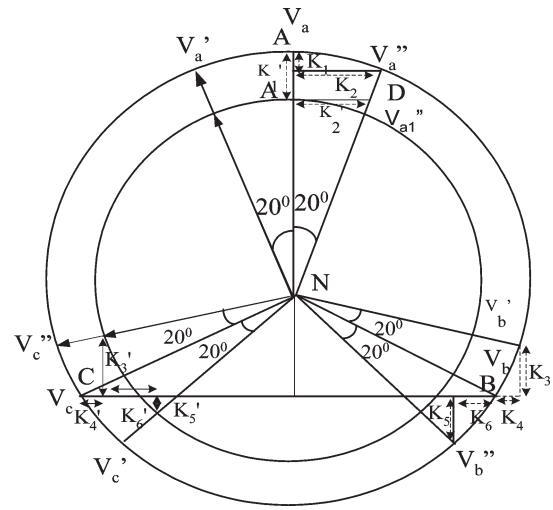

Fig. 6. Generalized vector diagram of phasor voltages for 18-pulse-based proposed harmonic mitigator for retrofit applications.

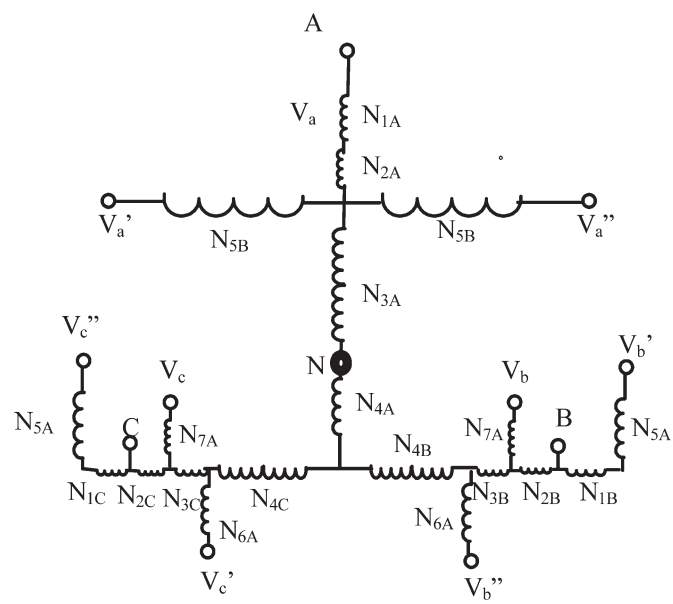

Fig. 7. Proposed autotransformer winding connection diagram for retrofit applications.

From triangle NHG

$$\begin{aligned} \mathrm{NH}/\mathrm{NG} &= \cos 40° \\ \mathrm{NH} &= V_b \cos 40° \\ K_5 * V_a &= \mathrm{IH} \\ &= (V_b \cos 40° - V_a/2) \end{aligned}$$

giving

$$K_5 = 0.266. \tag{6}$$

In addition

$$\begin{aligned} \mathrm{HG}/\mathrm{NG} &= \sin 40° \\ \mathrm{HG} &= V_{bc}/2 - K_6 * V_{bc}/2 \\ &= V_b \sin 40° \end{aligned}$$

giving

$$K_6 = 0.2577. \tag{7}$$

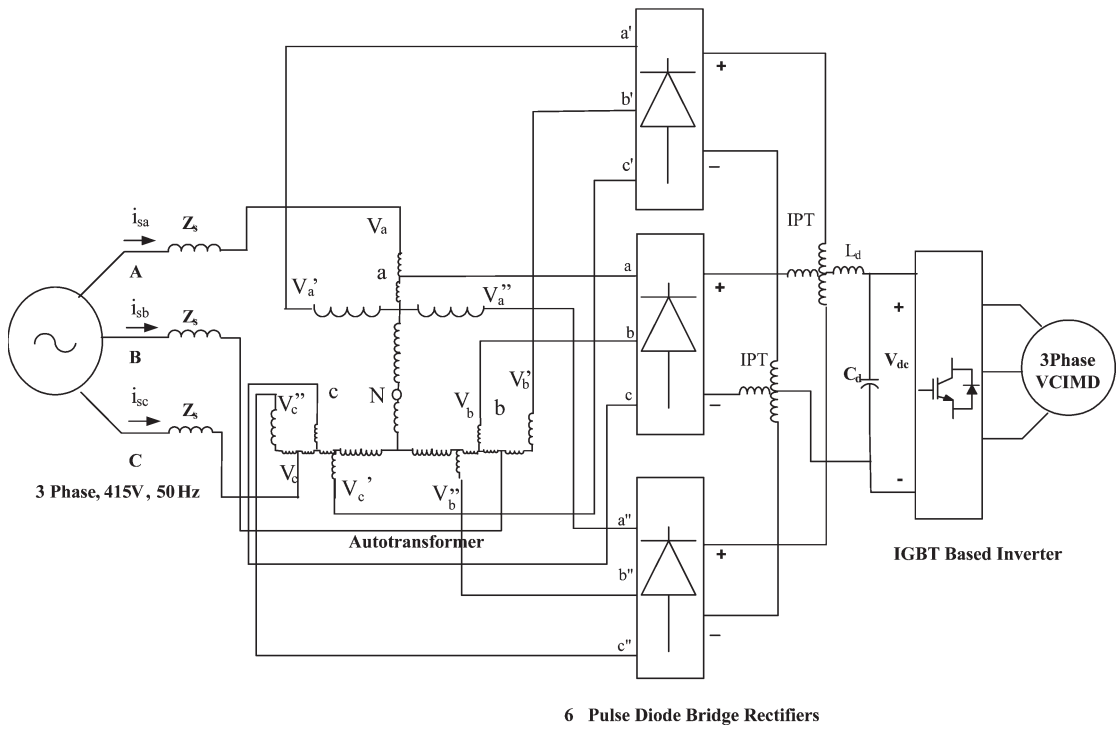

Fig. 8. T-connected autotransformer-based proposed 18-pulse converter for retrofit applications (with phase shift of $+20°$ and $-20°$) fed VCIMD (Topology D).

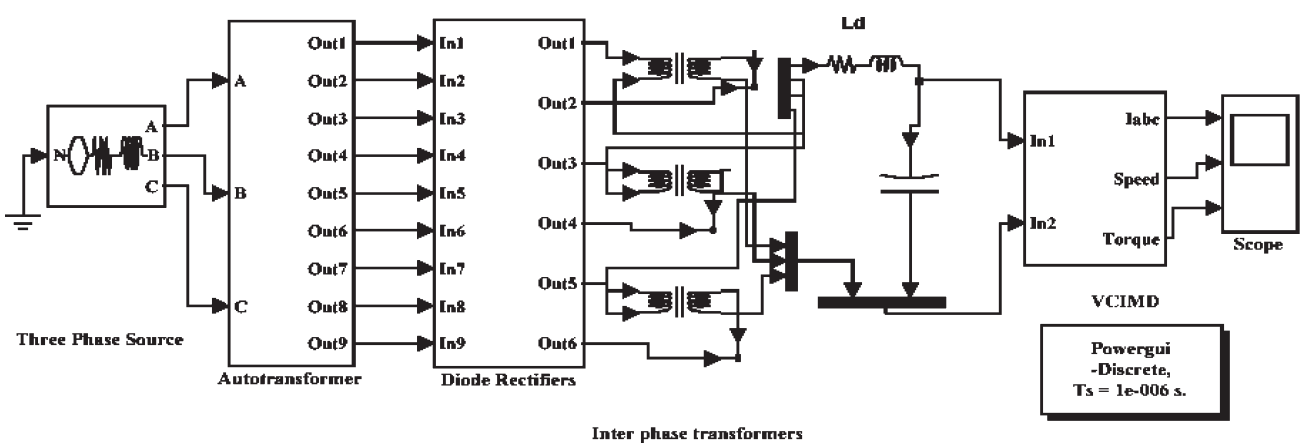

Fig. 9. MATLAB block diagram of proposed 18-pulse ac–dc converter fed VCIMD.

Thus, using the above calculated winding constants, the autotransformer can be designed for achieving an 18-pulse rectification. Fig. 4 shows the schematic diagram of a 12-pulse ac–dc converter, and Fig. 5 shows an 18-pulse converter feeding a VCIMD based on the above designed autotransformer. But, using the above winding constants, the average dc output voltage obtained is higher than that of the six-pulse diode rectifier due to an 18-pulse operation. The aforementioned design procedure can still be applied to redesign the transformer for retrofit applications. Fig. 6 shows the generalized diagram for varying the transformer output voltages while still maintaining an 18-pulse operation. Here, the outer circle represents voltages corresponding to the input supply-voltage system. To make the proposed ac–dc converter suitable for retrofit applications, the voltage for the three-phase diode bridge rectifiers are tapped at the inner circle (with 4% reduced voltage). Accordingly, the winding constants are calculated again resulting in $K_1' = 0.8922$, $K_2' = 0.18749$, $K_3' = 0.3354$, $K_4' = 0.0797$, $K_5' = 0.2257$, and $K_6' = 0.2952$, where K_1', K_2', K_3', K_4', K_5', and K_6' are the new winding constants to maintain the same dc bus voltage as in the case of the six-pulse diode bridge rectifier. Fig. 7 shows the modified autotransformer winding diagram for retrofit applications, and Fig. 8 shows the schematic diagram of the proposed 18-pulse ac–dc converter for retrofit applications, which is referred as Topology "D."

III. Vector-Controlled Induction-Motor Drive (VCIMD)

Fig. 1 shows the schematic diagram of an indirect VCIMD. In vector control, the induction motor is controlled like a dc motor having independent signals for flux and torque control.

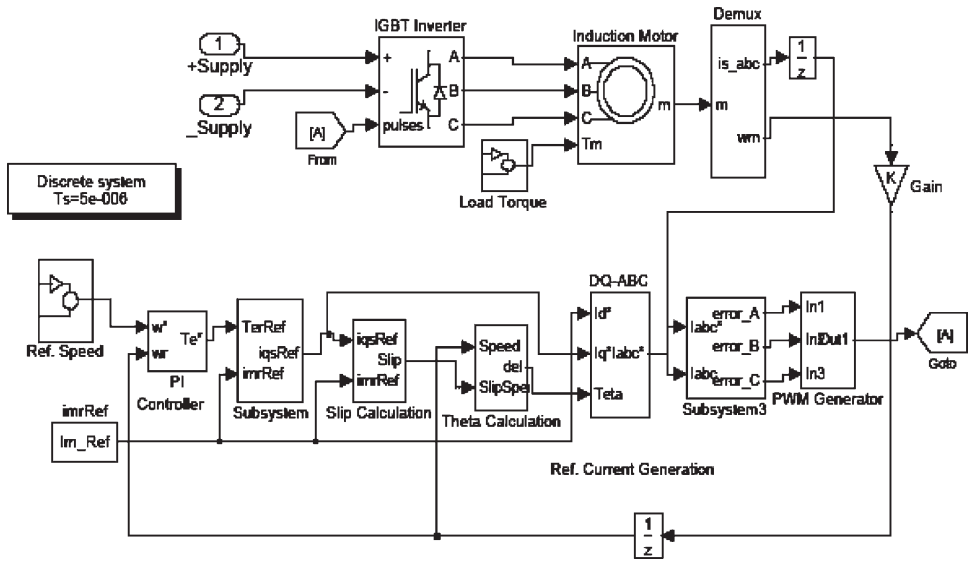

Fig. 10. MATLAB block diagram of VCIMD.

In the rotor-flux-oriented reference frame, the reference vector i_{SX} (flux component of the stator current) is obtained as

$$i^*_{\mathrm{SX}} = i_{\mathrm{mr}} + \tau_r(\Delta i_{\mathrm{mr}}/\Delta t) \tag{8}$$

where i_{mr} is the magnetizing current.

The closed-loop proportional-integral (PI) speed controller compares the reference speed (ω^*_r) with motor speed (ω_r) and generates reference torque T^* (after limiting it to a suitable value) as

$$T^*_{(n)} = T^*_{(n-1)} + K_p\{\omega_{e(n)} - \omega_{e(n-1)}\} + K_I\omega_{e(n)} \tag{9}$$

$$\omega_{e(n)} = \left(\omega^*_{(r)} - \omega_{r(n)}\right) \tag{10}$$

where $T^*_{(n)}$ and $T^*_{(n-1)}$ are the output of the PI controller (after limiting it to a suitable value), and $\omega_{e(n)}$ and $\omega_{e(n-1)}$ refer to speed error at the nth and $(n-1)$th instants. K_p and K_I are the proportional and integral gain constants.

The y-component of the stator current reference vector i_{sy} (torque component of stator current) is obtained from the output of the PI controller as

$$i^*_{\mathrm{sy}} = T^*/\left(k i^*_{\mathrm{sx}}\right). \tag{11}$$

These current components (i^*_{sx} and i^*_{sy}) are converted to stationary reference frame using rotor flux angle $\Psi_{(n)}$ calculated as sum of the rotor angle and the value of slip angle as

$$\omega^*_2 = i^*_{\mathrm{sy}}/\left(\tau_r i^*_{\mathrm{sx}}\right) \tag{12}$$

$$\Psi_{(n)} = \Psi_{(n-1)} + \left(\omega^*_2 + \omega_r\right)\Delta t \tag{13}$$

where ω^*_2 is the slip speed of rotor, and ω_r is the angular velocity of rotor. $\Psi_{(n)}$ and $\Psi_{(n-1)}$ are the value of rotor flux angles at nth and $(n-1)$th instants, respectively, and Δt is the sampling time taken as 100 μs.

These currents (i^*_{sx}, i^*_{sy}) in synchronously rotating frame are converted to stationary-frame three-phase currents (i^*_{as}, i^*_{bs}, i^*_{cs})

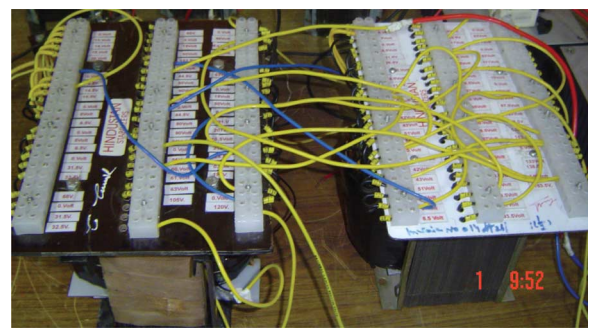

Fig. 11. Pictorial view of developed proposed autotransformer.

as follows:

$$i^*_{\mathrm{as}} = -i^*_{\mathrm{sy}}\sin\Psi + i^*_{\mathrm{sx}}\cos\Psi \tag{14}$$

$$i^*_{\mathrm{bs}} = \{-\cos\Psi + \sqrt{3}\sin\Psi\}i^*_{\mathrm{sx}}(1/2) + \{\sin\Psi + \sqrt{3}\cos\Psi\}i^*_{\mathrm{sy}}(1/2) \tag{15}$$

$$i^*_{\mathrm{cs}} = -(i^*_{\mathrm{as}} + i^*_{\mathrm{bs}}). \tag{16}$$

i^*_{as}, i^*_{bs}, and i^*_{cs} are the three-phase reference currents. These three-phase reference currents generated by the vector controller are compared with the sensed motor currents (i_{as}, i_{bs}, and i_{cs}). The calculated current errors are

$$i_{ke} = i^*_{ks} - i_{ks}, \qquad \text{where } k = a, b, c. \tag{17}$$

These current errors are amplified and fed to the pulsewidth-modulation (PWM) current controller, which controls the duty ratio of different switches in voltage source inverter (VSI). The VSI generates the PWM voltages being fed to the motor to develop the torque for running the motor at a desired speed under required loading conditions.

IV. Simulation and Experimentation

The proposed harmonic mitigators feeding VCIMD are simulated in MATLAB environment along with SIMULINK

TABLE I
POSSIBLE TURNS FOR DIFFERENT WINDINGS OF AUTOTRANSFORMER FOR NOMINAL VOLTAGE

N_{1A}	N_{2A}	N_{3A}	N_{4A}	N_{5A}	N_{1B}	N_{2B}	N_{3B}	N_{4B}	Magnitude Deviation from Ideal	Phase Angle Deviation from 20^0
14	218	116	76	62	26	52	148	78	0.17	0.25^0
10	155	83	54	44	19	37	106	56	0.14	0.18^0
7	109	58	38	31	13	26	74	39	0.23	0.29^0

TABLE II
POSSIBLE TURNS FOR DIFFERENT WINDINGS OF AUTOTRANSFORMER FOR REDUCED (RETROFIT) VOLTAGE

N_{1A}	N_{2A}	N_{3A}	N_{4A}	N_{5A}	N_{6A}	N_{7A}	N_{1B}	N_{2B}	N_{3B}	N_{4B}	N_{5B}	Magnitude Deviation from Ideal	Phase Angle Deviation from 20^0
9	14	216	120	56	80	5	19	8	51	148	79	0.06	0.07^0
5	8	130	72	33	48	3	11	5	31	89	47	0.36	0.35^0
13	21	324	180	84	112	7	28	12	76	222	118	0.18	0.02^0

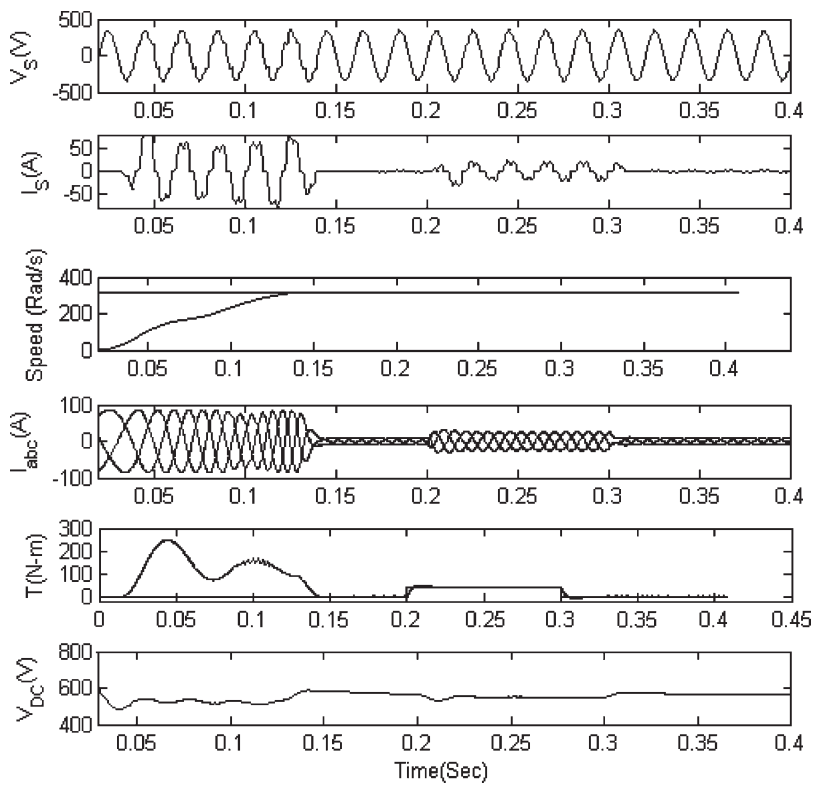

Fig. 12. Dynamic response of six-pulse diode rectifier fed VCIMD with load perturbation (Topology "A").

and power-system-blockset (PSB) toolboxes. Fig. 9 shows the MATLAB model of the proposed 18-pulse ac–dc converter feeding a VCIMD. Fig. 10 shows the sub-block of MATLAB model of a VCIMD. The VCIMD consists of a 10-hp three-phase induction-motor drive controlled using indirect vector-control technique. The detailed parameters of the induction motor are given in the Appendix.

To validate the simulation results, a prototype model of the proposed 18-pulse ac–dc converter, consisting of an autotransformer (as shown in Fig. 11), suitable to produce the phase-shifted voltages, interphase transformer, and diode rectifiers is developed in the laboratory, and different tests are conducted on it. The design details of the autotransformer are given in the following:

1) Flux density $= 0.8$ T, current density $= 2.3$ A / mm^2, Core size: Area of cross section of core $= 5161$ mm^2.
2) E-laminations: length $= 120$ mm, width $= 188$ mm.
3) I-laminations: length $= 188$ mm, width $= 25$ mm. Voltage per turn $= 1$ V.

Accordingly, the number of turns of different windings are calculated and wound around the core. It is observed that certain precalculated number of turns in different windings

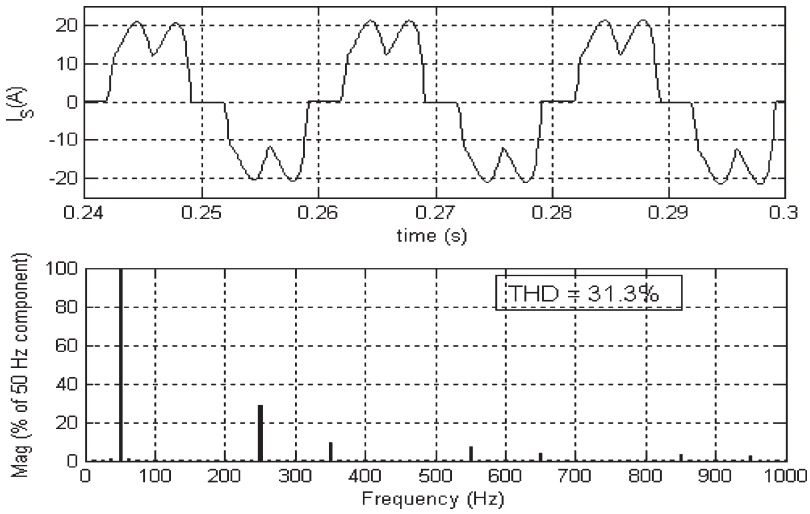

Fig. 13. AC mains current waveform of VCIMD fed by six-pulse diode rectifier along with its harmonic spectrum at full load (Topology "A").

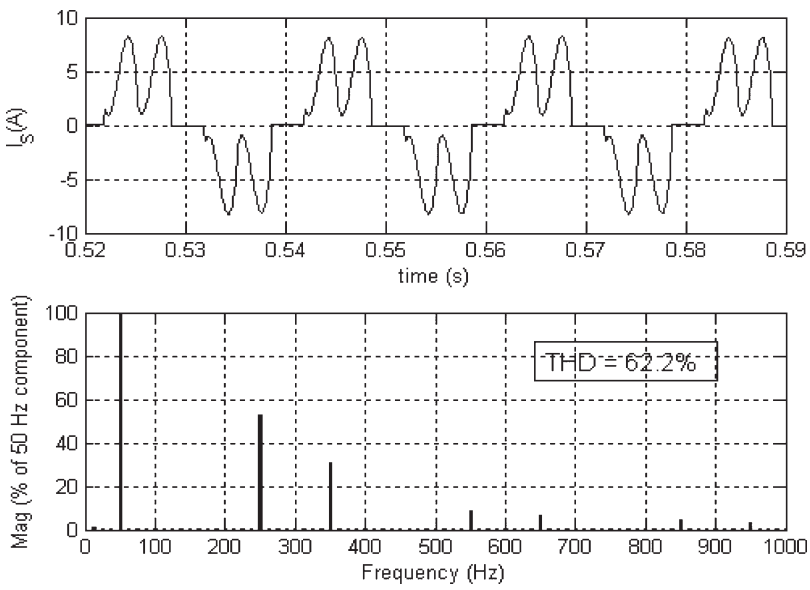

Fig. 14. AC mains current waveform of VCIMD fed by six-pulse diode rectifier along with its harmonic spectrum at light load (20%) (Topology "A").

TABLE III
COMPARISON OF POWER-QUALITY PARAMETERS OF A VCIMD FED FROM DIFFERENT AC–DC CONVERTERS

Sr. No.	Topology	THD V_s (%) Full Load	I_s (A)		THD of I_s (%)		DF		DPF		PF		DC Link Voltage(V) Average	
			Full Load	Light Load (20%)	Full Load	Light Load (20%)	Full Load	Light Load (20%)	Full Load	Light Load (20%)	Full Load	Light Load (20%)	Full Load	Light Load (20%)
1.	A	6.76	14.35	4.355	31.3	62.2	.954	.849	.979	.950	.935	.807	549	557
2.	B	3.93	11.63	2.35	10.8	17.0	.994	.986	.991	.994	.985	.989	555	560
3.	C	2.64	11.61	2.35	4.36	7.75	.999	.997	.98	.988	.98	.986	563	578
4.	D	3.06	11.46	2.35	4.24	7.89	.999	.997	.988	.992	.987	.989	549	557

Topology A: 6-pulse converter

Topology B: 12-pulse converter

Topology C: 18-pulse converter

Topology D: 18-pulse converter for retrofit applications

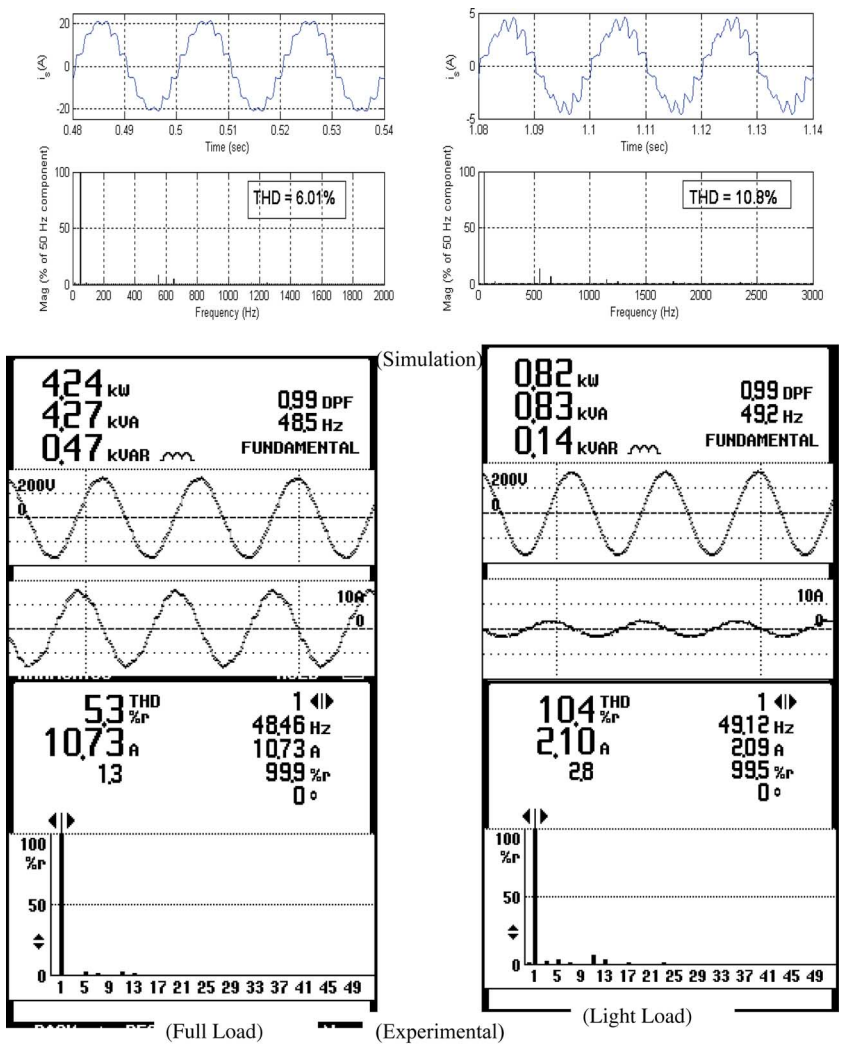

Fig. 15. AC mains current waveform along with its harmonic spectrum in simulation as well as in experimentation for Topology "B" (a) at full load and (b) at light load.

help in obtaining nearly equal magnitude and 20° phase-shifted voltages. Some practical examples giving the preferable number of turns in different windings of autotransformer (shown in Fig. 7) for the proposed 18-pulse ac–dc converter are shown in Table I for nominal voltage and in Table II for retrofit applications. Small magnitude and phase-angle deviations from the ideal ones are also mentioned in these tables. However, these deviations do not detract from the practical usefulness of the given design, and it is also observed that other turns selections are also possible.

Various tests on the developed 12- and 18-pulse ac–dc converters are carried out at three-phase line voltage of 230-V 50-Hz ac input with an equivalent resistive load. The recording of results have been carried out using Fluke made power-analyzer model 43B.

V. Results and Discussion

The proposed 12- and 18-pulse ac–dc converters have been modeled and designed for VCIMD load in MATLAB environment along with Simulink and PSB toolboxes. The dynamic performance of the drive, along with load perturbation on the VCIMD fed by a six-pulse diode bridge rectifier, is shown in Fig. 12. The set of curves consists of supply voltage v_s, supply current i_s, rotor speed "ω_r" (in electrical radians per second), three-phase motor currents i_{abcs}, motor-developed torque "T_e" (in Newton-meters), and dc-link voltage $v_{\rm dc}$ (in volts). The input current of a six-pulse diode bridge rectifier fed VCIMD are shown in Figs. 13 and 14. Fig. 13 shows the supply current waveform along with its harmonic spectrum at full load, showing the THD of ac mains current as 31.3%, which deteriorates to 62.2% at light load (20%), as shown in Fig. 14. Moreover, the PF at full load is 0.935, which deteriorates to 0.807 as the load is reduced to 20%, as shown in Table III. These results show that there is a need in improving the power quality at ac mains to replace the existing six-pulse converter.

A. Performance of 12-Pulse AC–DC Converter Fed VCIMD

To improve the power-quality indexes, a T-connected autotransformer-based 12-pulse ac–dc converter fed VCIMD has been designed, simulated, and developed. The THD of

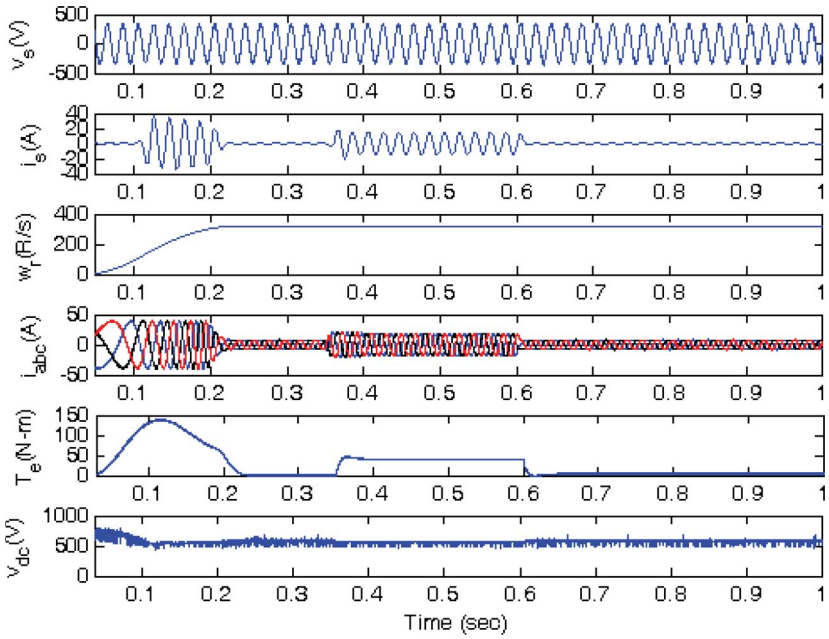

Fig. 16. Dynamic response of proposed 18-pulse ac–dc converter (Topology "D") fed VCIMD with load perturbation.

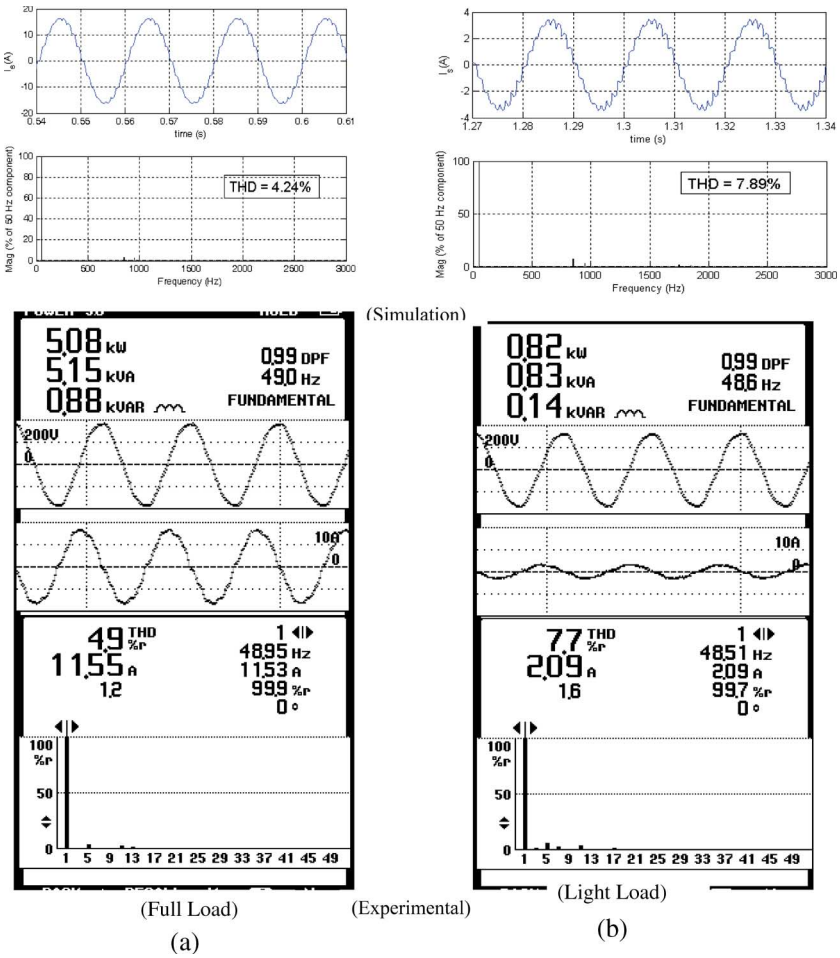

Fig. 17. AC mains current waveform along with its harmonic spectrum in simulation as well as in experimentation for Topology "D" (a) at full load and (b) at light load.

TABLE IV
COMPARISON OF POWER-QUALITY INDEXES OF PROPOSED 18-PULSE AC–DC CONVERTER FED VCIMD UNDER VARYING LOADS

Load (%)	THD (%) I_s	THD (%) V_t	CF of I_s	DF	DPF	PF	RF (%)	V_{dc} (V)
20	7.89	1.57	1.47	.997	.992	.989	1.11	557
40	6.78	2.0	1.44	.997	.993	.99	1.04	555
60	5.77	2.4	1.42	.998	.991	.989	0.96	554
80	4.96	2.73	1.42	.998	.989	.988	0.93	552
100	4.24	3.06	1.41	.999	.988	.987	0.92	549

TABLE V
COMPARISON OF RATING OF MAGNETICS IN DIFFERENT CONVERTER FED VCIMD

Sr. No.	Topo logy	Transformer Rating (kVA)	Interphase Transformer rating (kVA)	Rating of magnetics (% of drive rating)
1	A	0	0.0	0.0
2.	B	2.68	0.267	28.23
3.	C	3.163	0.288	33.00
4.	D	3.320	0.260	34.30

supply current at full load is observed as 6.01% in simulation and 5.3% in experimentation, as shown in Fig. 15(a). Under light load, the THD of ac mains current is observed to be 10.8% in simulation and 10.4% in experimentation, as shown in Fig. 15(b). The PF under these conditions is 0.987 and 0.989, respectively. Moreover, the dc-link voltage is higher than that of a six-pulse diode bridge rectifier. The rating of the overall magnetics is 28.23% of the drive rating.

B. Performance of the Proposed 18-Pulse AC–DC Converter

The 18-pulse ac–dc converter has been realized based on the novel T-connected autotransformer. The THD of supply current at full load is observed as 4.36% and the PF as 0.98. Similarly, under light-load condition, the supply current THD is observed as 7.75%, as shown in Table III. The dc-link voltage at full load is 563 V and, that, at light load is 578 V, which are higher than that of a six-pulse diode-bridge-rectifier output voltage. To make the scheme suitable for retrofit applications, the transformer has been redesigned as explained above and referred as Topology "D." The dynamic performance of the drive along with load perturbation on the VCIMD fed by the proposed 18-pulse ac–dc converter is shown in Fig. 16. Fig. 17 shows the supply current waveform of the proposed 18-pulse ac–dc converter (Topology "D") in simulation as well as in experimentation under different loading conditions. At full load, the THD of ac mains current is observed as 4.24% in simulation and 4.9% in measurements, and the PF obtained is 0.987. At light-load condition, the THD of ac mains current is 7.89% in simulation and 7.7% in experimentation, as shown in Fig. 17(b). The PF under this condition is observed as 0.989, as shown in Table III.

Table IV shows the effect of load variation on the VCIMD to study various power-quality indexes. It shows that the proposed ac–dc converter is able to perform satisfactorily under load variation on VCIMD with almost unity PF in the wide operating range of the drive, and the THD of supply current is always less than 8%. This is within the IEEE Standard 519 [7] limits for

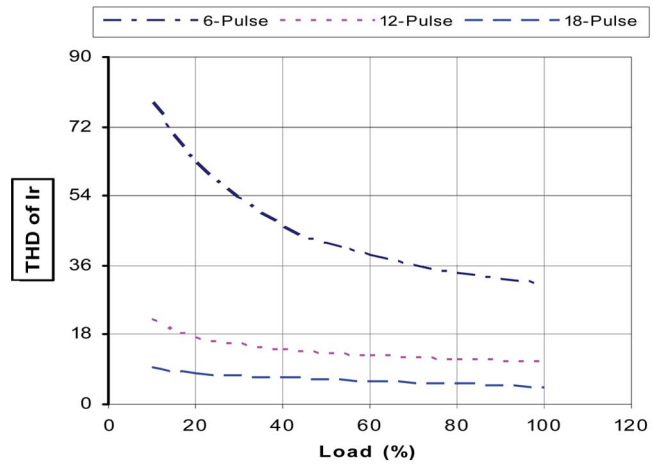

Fig. 18. Variation of the THD of ac mains current with load on VCIMD in 6-pulse (Topology "A"), 12-pulse (Topology "B"), and proposed 18-pulse ac–dc converter (Topology "D") fed VCIMD.

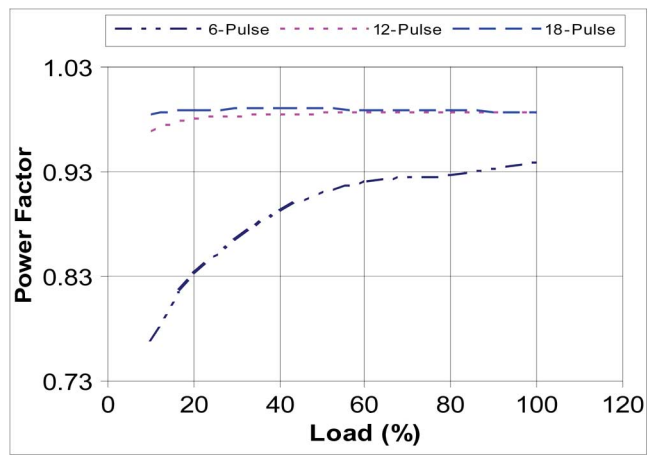

Fig. 19. Variation of PF with load on VCIMD in 6-pulse (Topology "A"), 12-pulse (Topology "B"), and proposed 18-pulse ac–dc converter (Topology "D") fed VCIMD.

SCR $>$ 20. On the magnetics front, as shown in Table V, the proposed 18-pulse ac–dc converter needs an autotransformer of 3.32 kVA and an interphase transformer of 0.26 kVA, making the total magnetics required as 3.58 kVA, which is 34.3% on the input of the VCIMD.

Fig. 18 shows the variation of the THD of ac mains current of the VCIMD at full load, fed from six-pulse ac–dc converter, 12-pulse ac–dc converter, and the proposed 18-pulse ac–dc converter. Similarly, Fig. 19 shows the variation of PF at full load for a VCIMD fed from different ac–dc converters. It is evident from these figures that the proposed 18-pulse ac–dc converters results in superior performance in terms of various power-quality indexes.

VI. CONCLUSION

The design, modeling, simulation, and development of a novel T-connected autotransformer-based 18-pulse ac–dc converter with a VCIMD load has been carried out for varying loads. The proposed autotransformer makes use of only two single-phase transformers, resulting in saving in space, weight, volume, and the cost. The design technique of the proposed

converter has shown the flexibility to design the transformer suitable for retrofit applications. The proposed 18-pulse ac–dc converter has shown its capability to improve the THD of supply current to below 8% and PF close to unity in a wide operating range of the drive. There has been remarkable improvement in other power-quality indexes at ac mains as well as on the dc side.

Appendix
Motor and Controller Specifications

Three-phase squirrel-cage induction motor: -10 hp (7.5 kW), three phase, four pole, Y connected, 415 V, 50 Hz, $R_s = 1.0\ \Omega$, $R_r = 0.76\ \Omega$, $X_{ls} = 0.77\ \Omega$, $X_{lr} = 0.77\ \Omega$, $X_m = 18.84\ \Omega$, $J = 0.1\ \mathrm{kg \cdot m^2}$.

1) PI controller: $K_p = 7.0$, $K_i = 0.1$.
2) DC-link parameters: $L_d = 0.002$ H, $C_d = 3200\ \mu$F.
3) Magnetics ratings: 18-pulse autotransformer rating 3.32 kVA, interphase transformer 0.26 kVA.

References

[1] B. K. Bose, "Recent advances in power electronics," *IEEE Trans. Power Electron.*, vol. 7, no. 1, pp. 2–16, Jan. 1992.

[2] J. D. Van Wyk, "Power quality, power electronics and control," in *Proc. Eur. Power Electron. Assoc.*, 1993, vol. 93, pp. 17–32.

[3] P. Vas, *Sensorless Vector and Direct Torque Control*. London, U.K.: Oxford Univ. Press, 1998.

[4] R. Redl, P. Tenti, and J. D. Van Wyk, "Power electronics polluting effects," *IEEE Spectr.*, vol. 34, no. 5, pp. 32–39, May 1997.

[5] D. D. Shipp and W. S. Vilcheck, "Power quality and line considerations for variable speed ac drives," *IEEE Trans. Ind. Appl.*, vol. 32, no. 2, pp. 403–409, Mar./Apr. 1996.

[6] D. A. Jarc and R. G. Schieman, "Power line considerations for variable frequency drives," *IEEE Trans. Ind. Appl.*, vol. IA-21, no. 5, pp. 1099–1105, Sep. 1985.

[7] *IEEE Guide for Harmonic Control and Reactive Compensation of Static Power Converters*. IEEE Standard 519-1992.

[8] D. A. Paice, *Power Electronic Converter Harmonics: Multipulse Methods for Clean Power*. New York: IEEE Press, 1996.

[9] D. A. Paice and R. J. Spreadbury, "Calculating and controlling harmonics caused by power converters," in *Proc. IAS Annu. Meeting*, Oct. 1989, vol. 1, pp. 456–463.

[10] S. Choi, P. N. Enjeti, and I. J. Pitel, "Polyphase transformer arrangements with reduced kVA capacities for harmonic current reduction in rectifier type utility interface," *IEEE Trans. Power Electron.*, vol. 11, no. 5, pp. 680–689, Sep. 1996.

[11] A. Uan-Zo-li, R. Burgos, F. Wang, D. Boroyevich, F. Lacaux, and A. Tardy, "Comparison of prospective topologies for aircraft autotransformer-rectifier units," in *Proc. IEEE IECON*, Nov. 2003, vol. 2, pp. 11 211–11 127.

[12] S. Hansen, U. Borup, and F. Blaabjerg, "Quasi 12-pulse rectifier for adjustable speed drives," in *Proc. IEEE APEC*, Mar. 2001, vol. 2, pp. 806–812.

[13] J. Ages and A. Silva, "Analysis and performance of A 12-pulse high power regulator," in *Proc. Conf. Rec. Power Modulator Symp.*, 1994, pp. 156–158.

[14] T. J. Liang, J. F. Chen, C. L. Chu, and K. J. Chen, "Analysis of 12 pulse phase control AC/DC converter," in *Proc. IEEE PEDS*, Jul. 1999, vol. 2, pp. 779–783.

[15] E. Ngandui, E. J. Mohammed, G. Olivier, and P. Sicard, "Analytical prediction of harmonics produced by a twelve-pulse converter under unbalanced supply voltage," in *Proc. Harmonics and Quality Power Conf.*, 2000, vol. 1, pp. 365–370.

[16] A. Kloss, "Interaction between the DC and AC side of twelve-pulse converter systems," in *Proc. Power Electron. and Variable-Speed Drives Conf.*, 1988, pp. 420–423.

[17] D. A. Paice, "Multipulse converter system," U.S. Patent 4 876 634, Oct. 24, 1989.

[18] P. W. Hammond, "Autotransformer," U.S. Patent 5 619 407, Apr. 8, 1997.

[19] D. A. Paice, "Transformers for multipulse AC/DC converters," U.S. Patent 6 101 113, Aug. 8, 2000.

[20] G. R. Kamath, D. Benson, and R. Wood, "A novel autotransformer based 18-pulse rectifier circuit," in *Proc. IEEE IECON*, 2003, pp. 1122–1127.

[21] G. R. Kamath, B. Runyan, and R. Wood, "A compact autotransformer based 12-pulse rectifier circuit," in *Proc. IEEE IECON*, 2001, pp. 1344–1349.

[22] S. Hansen, U. Borup, and F. Blaabjerg, "Quasi 12-pulse rectifier for adjustable speed drives," in *Proc. IEEE APEC Conf.*, 2001, pp. 806–812.

[23] F. J. Chivite-Zabalza, A. J. Forsyth, and D. R. Trainer, "Analysis and practical evaluation of an 18-pulse rectifier for aerospace applications," in *Proc. IEEE PEMD, Conf.*, 2004, pp. 338–343.

[24] F. J. M. de Seixas and I. Barbi, "A 12 kW three-phase low THD rectifier with high frequency isolation and regulated dc output," *IEEE Trans. Power Electron.*, vol. 19, no. 2, pp. 371–377, Mar. 2004.

[25] B. Singh, G. Bhuvaneswari, and V. Garg, "Reduced rating T-connected autotransformer for converting three phase ac voltages to nine/six phase shifted ac voltages," 2005. Indian Patent Application 2427/Del/2005 Dt.09-09-2005.

[26] V. Kumar, "Power quality improvements at ac mains in variable frequency induction motor drives," Ph.D. dissertation, Indian Inst. Technol., New Delhi, India, 2006.

[27] M. G. Say, *The Performance and Design of Alternating Current Machines*. New York: Pitman, 1962.

Bhim Singh (SM'99) was born in Rahamapur, India, in 1956. He received the B.E. degree in electrical engineering from the University of Roorkee, Roorkee, India, in 1977, and the M.Tech. and Ph.D. degrees from Indian Institute of Technology (IIT) Delhi, New Delhi, India, in 1979 and 1983, respectively.

In 1983, he was a Lecturer and, in 1988, became a Reader in the Department of Electrical Engineering, University of Roorkee. In December 1990, he became an Assistant Professor, in 1994, an Associate Professor, and in 1997, a Professor in the Department of Electrical Engineering, IIT Delhi. His field of interest includes power electronics, electrical machines and drives, active filters, static reactive voltampere (VAR) compensator, and analysis and digital control of electrical machines.

Dr. Singh is a Fellow of the Indian National Academy of Engineering, Institution of Engineers, India, and Institution of Electronics and Telecommunication Engineers, a Life Member of the Indian Society for Technical Education, System Society of India, and National Institution of Quality and Reliability.

Vipin Garg (M'05) was born in Kurukshetra, India, in 1972. He received the B.Tech. degree in electrical engineering and the M.Tech. degree from the Regional Engineering College, Kurukshetra, in 1994 and 1996, respectively.

In 1995, he was a Lecturer in the Department of Electrical Engineering, Regional Engineering College. In January 1998, he joined Indian Railways Service of Electrical Engineers as an Assistant Electrical Engineer and became a Deputy Chief Electrical Engineer in 2006. He is currently with Reliance Energy Limited, Mumbai, India. His field of interest includes power electronics, electric traction, and drives.

G. Bhuvaneswari (SM'99) received the M.Tech. and Ph.D. degrees from the Indian Institute of Technology (IIT), Madras, India, in 1988 and 1992, respectively.

In 1997, she was an Assistant Professor and became Associate Professor in 2006 in the Department of Electrical Engineering, IIT Delhi, New Delhi, India. Her field of interest includes power electronics, electrical machines and drives, active filters, and power conditioning.

Dr. Bhuvaneswari is a Fellow of the Institution of Electronics and Telecommunication Engineers (IETE).