Proceedings of 2014 RAECS UIET Panjab University Chandigarh, 06 – 08 March, 2014

Design of AVR and ALFC for Single Area Power System Including Damping Control

Aditi Gupta
EEE Department
UIET, Panjab University
Chandigarh, India
aditi_2881@rediffmail.com

Amit Chauhan
ME Department
UIET, Panjab University
Chandigarh, India
drchauhan98@gmail.com

Rintu Khanna
EE Department
PEC University of Technology
Chandigarh, India
rintukhanna1@rediffmail.com

***Abstract*—This paper presents the combined control for single area power system including automatic voltage control by using automatic voltage regulator (AVR) and automatic frequency control by using automatic load frequency control (ALFC). The paper shows the coupling effects between the two loops, which are studied by extending the linearised ALFC system to incorporate the excitation system. A proportional integral gain controller is included in the AVR loop and conventional integral controller in ALFC loop so that system responses become better in terms of peak deviations and settling time. Damper winding is included in the AVR loop which is present on the rotor of the synchronous generator. Simulation studies reveal that the response of the system becomes better in terms of peak deviations (overshoots and undershoots) and settling time when damper winding is included in the system.**

***Keywords*—AVR; ALFC; excitation system; damper winding; simulation; generator swing equation (GSE).**

I. Introduction

In a power system, as the demand changes with an unpredictable small amount from its normal value, state of the system changes. Some automatic controls must be provided to detect these changes and initiate a set of anti-control actions which eliminate such state deviations quickly and effectively. The two such major controls are AVR control and ALFC [1, 2]. The magnitude of the terminal voltage of the system is dependent on the reactive power of the system and is maintained in the specified limits by using AVR control. The megawatt output and frequency of the synchronous generator is dependent on the real power of the system and is maintained in specified limits by using ALFC. Figure 1 shows the two control loops of synchronous generator viz. ALFC and AVR loops.

The cross coupling between the ALFC and AVR loops has been neglected by most of the researches [3, 4]. By considering the AVR loop much faster than the ALFC loop as the time constants of field windings in excitation control are much smaller than the time constants in ALFC loop, the oscillations in AVR loop settle down more quickly than the oscillations in ALFC and they become non-interacting. However, in practical systems, some interaction exists between the two, although it has been reported to be a weak coupling relationship [5].

The combined model of automatic generation control (AGC) and AVR loops for single area power system has been presented including fuzzy logic controller (FLC) in [6]. Comparison is made between FLC and PID controller for the two loops which concluded that FLC gives better dynamic responses. In [7], tuning of PID controller for the AVR and AGC loops is presented by using two different methods viz. ziegler method and bacterial foraging optimization (BFO). It has been reported by the authors that the BFO method yields overall better performance regarding settling time and overshoot of the responses in comparison to the ziegler method. Load scheduling strategy is explained for interconnected thermal power system having AGC and AVR loops in [8].

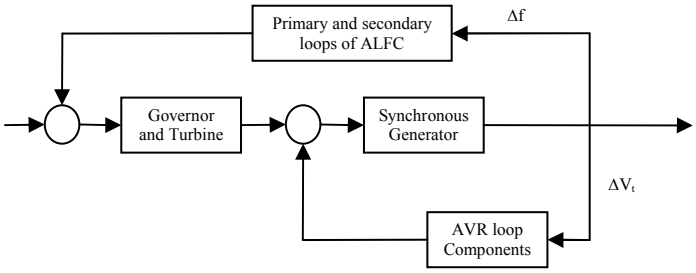

Fig. 1 Combined control of synchronous generator with AVR and ALFC loops.

Robust coordinated AVR-PSS (RCAP) classical model has been presented in [9] for the study of single machine infinite bus system by tuning the AVR with the power system stabilizer (PSS) to stabilize voltage under transient conditions. In [10, 11], the frequency and tie-line power regulation by using AGC in an interconnected hydrothermal power system using conventional integral controller and fuzzy logic controller has been discussed.

This paper addresses the stability problems in power systems in the form of self-excited low-frequency oscillations, which are referred as “steady-state instabilities”, because they occur unexpected when the system appears to be running in smooth steady state. This type of instability actually occurs due to the cross-coupling effects between AVR and ALFC loops and is associated with the natural oscillatory modes of

978-1-4799-2291-8/14/$31.00 ©2014 IEEE

the system. Damper winding is included in the AVR loop which is present on the rotor of the synchronous generator.

The rest of the paper is organized as: In section II, mathematical modeling of AVR loop of power system is presented. Section III gives the combined AVR and ALFC loops for single area power system. In section IV, the damper winding modeling is presented. Simulation results are discussed in section V. Section VI comprises the conclusions.

II. AVR MODELLING

The main component of AVR loop is the exciter that excites the alternator field and controls its flux. The major role of AVR and exciter is to maintain the generator terminal voltage constant during slow and steady changes in the load as well as during the emergency situations [1]. The various components of AVR control loop are amplifier, exciter, generator field, sensor and controller.

A. Amplifier

The comparator continuously compares the reference voltage (V_{ref}) and actual output voltage (V_t) and generates a voltage error signal, which is fed to the amplifier. The amplifier can be magnetic, rotational or electronic type. Due to the delay in the response of amplifier, its transfer function ($T.F._a$) is given by eq. (1).

$$T.F._a = \frac{K_a}{1+sT_a} = \frac{\Delta V_R}{\Delta V_t} \quad (1)$$

where ΔV_R is the amplifier output and ΔV_t is the error voltage and is given by eq. (2).

$$\Delta V_t = V_{ref} - V_t \quad (2)$$

The output of the amplifier is fed to the exciter.

B. Exciter:

The exciter receives the amplified error signal from the amplifier and excites the alternator field to control flux and hence controls the terminal voltage. Due to the magnetic saturation, the output of exciter is non-linear function of field current. But an approximate linear transfer function ($T.F._e$) is assumed here and is given by eq. (3).

$$T.F._e = \frac{K_e}{1+sT_e} = \frac{\Delta V_f}{\Delta V_R} \quad (3)$$

where ΔV_f is the field voltage of synchronous generator.

C. Generator Field:

The output of the exciter is fed to the generator field winding whose transfer function ($T.F._g$) is given by eq. (4).

$$T.F._g = \frac{K_f}{1+sT_{do}} = \frac{\Delta E}{\Delta V_f} \quad (4)$$

where ΔE is the change in generated emf.

D. Sensor:

It senses the actual voltage output at every moment and sends it to the comparator for comparison against reference voltage, so that error signal is generated. Its transfer function ($T.F._s$) is given by eq. (5).

$$T.F._s = \frac{K_s}{1+sT_s} = \frac{V}{V_t} \quad (5)$$

E. Controller:

Conventional proportional integral gain controller is used to improve the dynamic responses of the system in terms of peak deviations and settling time. Its transfer function ($T.F._c$) is given by eq. (6).

$$T.F._c = \frac{K_p s + K_i}{s} \quad (6)$$

III. COMBINED MODEL OF AVR AND ALFC LOOPS

The ALFC loop consists of governor, turbine and generator moment of inertia. Their modeling is discussed in [10, 11]. The AVR and ALFC loops are not completely non-interacting. Some cross-coupling exist between the two and must be considered while modeling the power system. AVR loop controls the magnitude of the generated emf E that determines the magnitude of the real power. Frequency is dependent on this real power, so the changes in AVR loop must be felt in the ALFC loop.

There are two reasons for change in the generated emf E viz. change in the field voltage V_f and change in the relative position of rotor or rotor angle $\Delta\delta$. This relationship is represented by eq. (7).

$$\Delta E = \Delta V_f - K_4 \Delta\delta \quad (7)$$

The terminal voltage V_t consists of two components. These are V_q that is q-axis component of voltage that increases with E and V_d that is d-axis component of voltage that increases with δ. This relationship is represented by eq. (8).

$$V_t = K_3 \Delta E + K_5 \Delta\delta \quad (8)$$

When the coupling between the two loops is considered, the effect of voltage on AVR electrical power output (ΔP_e) is given by eq. (9).

$$\Delta P_e = K_1 \Delta\delta + K_2 \Delta E \quad (9)$$

The combined model consisting of AVR loop and ALFC loop for single area power system is shown in Fig. 2. The coupling effects between the two loops are also included.

IV. DAMPER WINDING

The theory given in sections II and III assumed that the inertial oscillations set up in the system following a perturbation are undamped. The GSE in undamped situation is given by eq. (10)

$$\frac{d^2}{dt^2}(\Delta\delta) + S'\frac{\pi f}{H}\Delta\delta = 0 \quad (10)$$

where S′ is electrical stiffness in pu MW/radian, f is normal frequency in Hz, H is pu inertia constant in seconds.

In reality, the oscillations set up in the system are damped after sometime, due to the presence of damper winding in the rotor of synchronous generator. As rotor moves relative to the synchronously running infinite system, its damper winding also moves relative to the armature flux. This

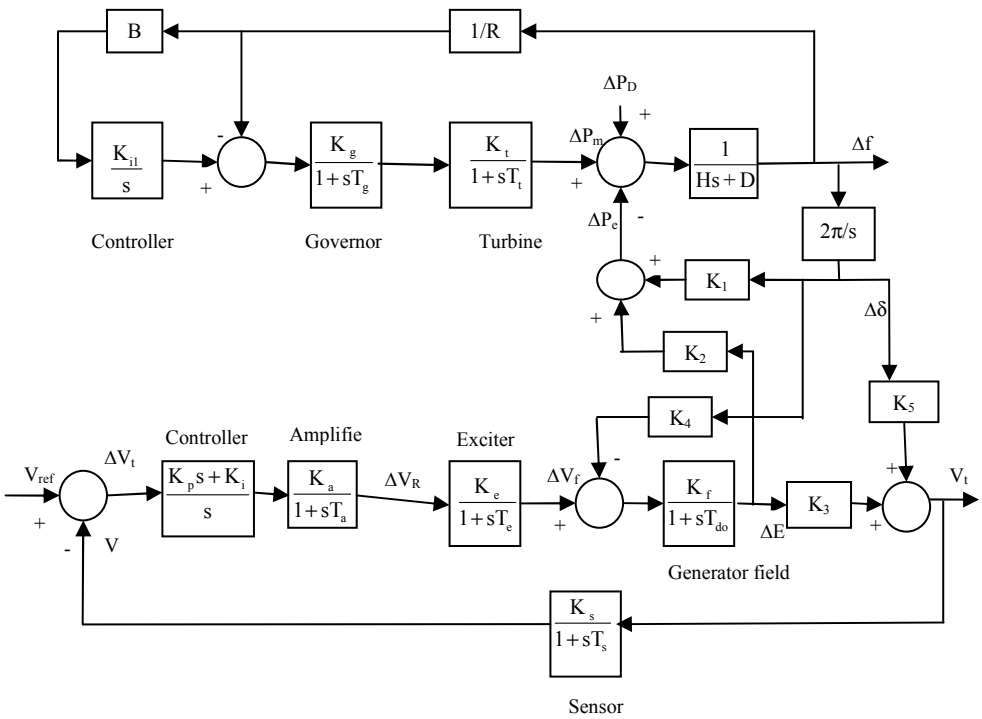

Fig. 2 Mathematical model of a power system having ALFC and AVR loops.

relative motion induce currents in the damper winding that tries to stop the relative motion between damper winding and armature flux, in accordance with Lenz's law [1, 2]. The dissipation factor of damper winding is approximately proportional to the relative velocity and is equal to d(Δδ)/dt. The modified GSE is given by eq. (11).

$$\frac{d^2}{dt^2}(\Delta\delta)+2b\frac{d}{dt}(\Delta\delta)+S'\frac{\pi f}{H}\Delta\delta=0 \qquad (11)$$

Where, b is the positive damping coefficient. The damper winding model is shown in Fig. 3.

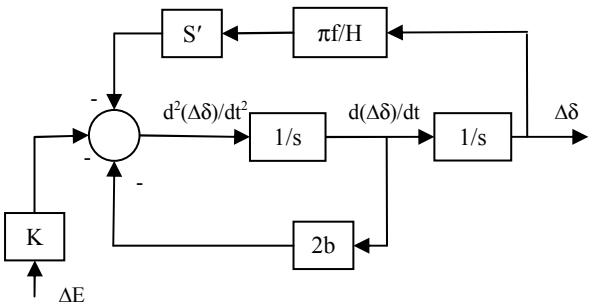

Fig. 3 Damper winding model.

V. SIMULATION RESULTS

For simulation studies, the combined model of AVR loop and ALFC loop for single area power system as shown in Fig. 2 has been built in MATLAB simulation software. Effect of damper winding as shown in Fig. 3 has also been studied. The optimal values of all constants and controller gains are given in Table I. The various power system parameters are given in Appendix A. Reference voltage is set at 1 pu and load perturbation of 0.2% is used.

TABLE I. OPTIMAL VALUES OF CONSTANTS AND CONTROLLER GAINS

Constants						Controller Gains		
K_1	K_2	K_3	K_4	K_5	K	K_{i1}	K_p	K_i
0.014	1.85	1.03	0.013	0.021	0.986	0.159	0.159	0.25

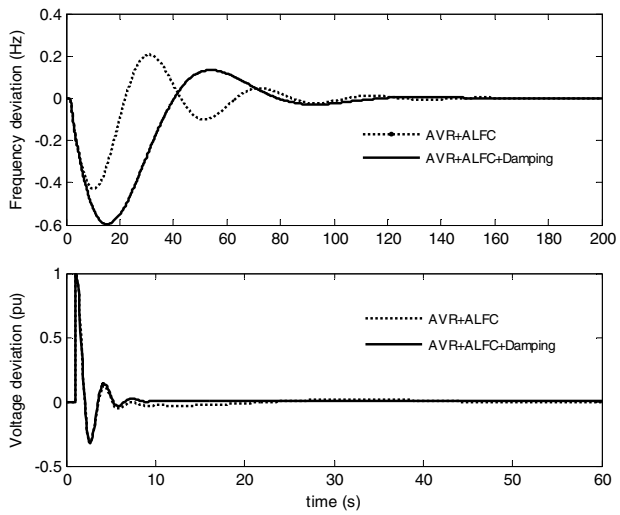

Fig. 4 Deviations in frequency and terminal voltage with time.

Figure 4 shows the deviations in frequency and deviations in terminal voltage with respect to time under the condition of with and without damper winding. Figure 5 shows the variation in terminal voltage with respect to time, under two scenarios that is with and without damper winding. These figures (4 and 5) reveal that the AVR loop is able to maintain a regulated terminal voltage under changing load conditions which makes the power system robust. Further, the dynamic responses become better in terms of peak deviations and settling time when damper winding is integrated into the system.

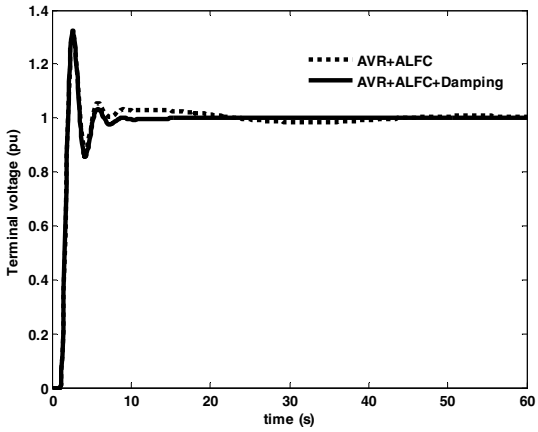

Fig. 5 Terminal voltage with respect to time.

Figure 6 shows the deviations in turbine power output and internal electrical power with respect to time. Figure 6 reveal that in the absence of damper winding, the value of these powers is 0.6 pu. When damper winding is included in the system, these powers increases by about 200% that is become 1.8 pu. This is due to the fact that damper winding emits some power that serves as the system shock absorber and responses become better in terms of peak deviations and settling time.

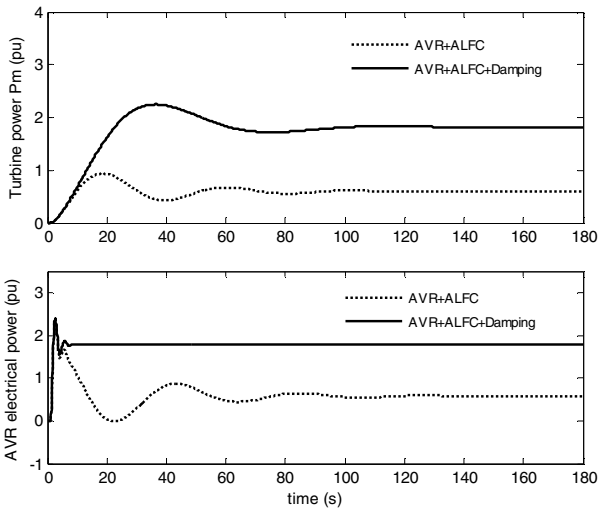

Fig. 6 Turbine power output and internal electrical output with respect to time.

VI. CONCLUSIONS

The two major loops that is AVR loop and ALFC loop has been studied for single area power system. The frequency of the system is dependent on real power output and is taken care of by ALFC. Terminal voltage of the system is dependent on the reactive power of the system and is taken care of by AVR loop. The cross coupling effects between the two loops are studied that are associated with low-frequency oscillations. Effect of damper winding in the system has also been studied. It is clear from the figures that AVR loop is able to maintain the voltage and frequency deviations in the specified limits and the power system thus becomes more robust. By the inclusion of damper winding, the dynamic responses are further improved in terms of peak deviations and settling time. As damper emanates power to the system, the power output of turbine and internal electrical power is increased by almost 200%.

APPENDIX A

The various system parameters are:

f (nominal system frequency) = 60 Hz
ΔP_D(change in load demand) = 0.02 pu
K_g(governor gain) = 1
T_g(governor time constant) = 0.06 seconds
K_t(turbine gain) = 1
T_t(turbine time constant) = 0.32 seconds
H(inertia cinstant) = 10 seonds
D($\Delta P_D/\Delta f$) = 0.8 puMW/Hz
R(governor speed regulation parameter) = 1.7 Hz/pu MW
B(frequency bias constant) = 1 pu MW/Hz
K_a(amplifier gain) = 20
T_a(amplifier time constant) = 0.05 seconds
K_e(exciter gain) = 1
T_e(exciter time constant) = 0.6 seconds
K_f(generator field gain) = 0.37
T_{do}(generator field time constant) = 2.8712 seconds
K_s(sensor gain) = 1
T_s(sensor time constant) = 0.05 seconds
S′ (electrical stiffness) = 1.565 pu MW/radian
b(damping coefficient) = 20

REFERENCES

[1] O. I. Elgerd, Electrical Energy Systems Theory: An Introduction, 2nd ed., TMH, 1989.
[2] Kundur, Power System Stability and Control, TMH, 1994.
[3] S. Kumar, G. Sharma, and G. Singh, “AGC & AVR of interconnected thermal power system while considering the of GRCs,” IJSCE, vol. 2, issue 1, pp. 69-74, March 2012.
[4] B.U. Musa, B.M. Kalli, K. Shettima, “Modeling and simulation of Lfc and Aver with Pid controller,” IJESI, vol. 2, issue 7, pp. 54-57, July 2013.
[5] E. Rakhshani, K. Rouzbehi and S. Sadeh, “A new combined model for simulation of mutual effects between LFC and AVR loops,” IEEE conf. on Power and Energy Engg., APPEEC, pp. 1-5, March 2009.
[6] P. Dabur, N. Kumar and R. Avtar, “Matlab design and simulation of AGC and AVR for single area power system with

fuzzy logic control," IJSCE, vol. 1, issue 6, pp. 44-49, January 2012.

[7] A.M. Hamza, M.S. Saad, H.M. Rashad and A. Bahgat, "Design of LFC and AVR for single area power system with PID controller tuning by BFO and Ziegler methods," IJCST, vol. 4, issue 5, pp. 12-17, May 2013.

[8] G. Singh, R. Bala, "Automatic generation and voltage control of interconnected thermal power system including load scheduling strategy," IJEAT, vol. 1, issue 2, pp. 1-7, December 2011.

[9] R. Behera, B.P.Panigrahi and B.B. Pati, "Damping control of automatic voltage regulator loop using robust control technique," Int. Conf. on Advances in Recent Technologies in Communication and Computing, pp. 264-266, 2010.

[10] J.Nanda, A. Mangla, "Automatic generation control of an interconnected hydro-thermal system using conventional integral and fuzzy logic controller," IEEE Conference on Electric Utility, DRPT, pp. 372-377, April 2004.

[11] J. Nanda, A. Mangla and Sanjay Suri, "Some new findings on automatic generation control of an interconnected hydrothermal system with conventional controllers," IEEE Transactions on Energy Conversion, vol. 21, No. 1, pp. 187-194, March 2006.